LEGEND

SHEET 1	LEGEND
SHEET 2	ELEVATION RSS2000
SHEET 3	ELEVATION RSS2000V
SHEET 4	ELEVATION RSS2000VI
SHEET 5	FOUNDATION RSS2000
SHEET 6	FOUNDATION RSS2000V
SHEET 7	FOUNDATION RSS2000VI
SHEET 8	LAYOUT, SINGLE UNIT
SHEET 9	LAYOUT, TWO UNITS
SHEET 10	CONDUIT LAYOUT- SINGLE UNIT
SHEET 11	CONDUIT LAYOUT- TWO UNITS
SHEET 12	WIRE AND CONDUIT LEGEND
SHEET 13	CONTROL PANEL FOUNDATION

DWN BY: JB
DATE: 2-8-16
PROJECT NO.
SHEET NO. 1

PROJECT NAME: OEM Typical Drawings
SHEET TITLE: LEGEND
SAMPLE DRAWINGS

RSSI BARRIERS, LLC
6530 HWY. 22
PANAMA CITY, FL. 32404
(850)871-9300
RSSI BARRIERS, LLC
866.249.1029
www.rssi.com

REV:	DESCRIPTION:	BY:	DATE:

RSSI BARRIERS, LLC. ALL RIGHTS RESERVED. NO PART OF THIS DOCUMENT MAY BE REPRODUCED OR UTILIZED IN ANY FORM WITHOUT PRIOR WRITTEN AUTHORIZATION OF RSSI BARRIERS, LLC. ©

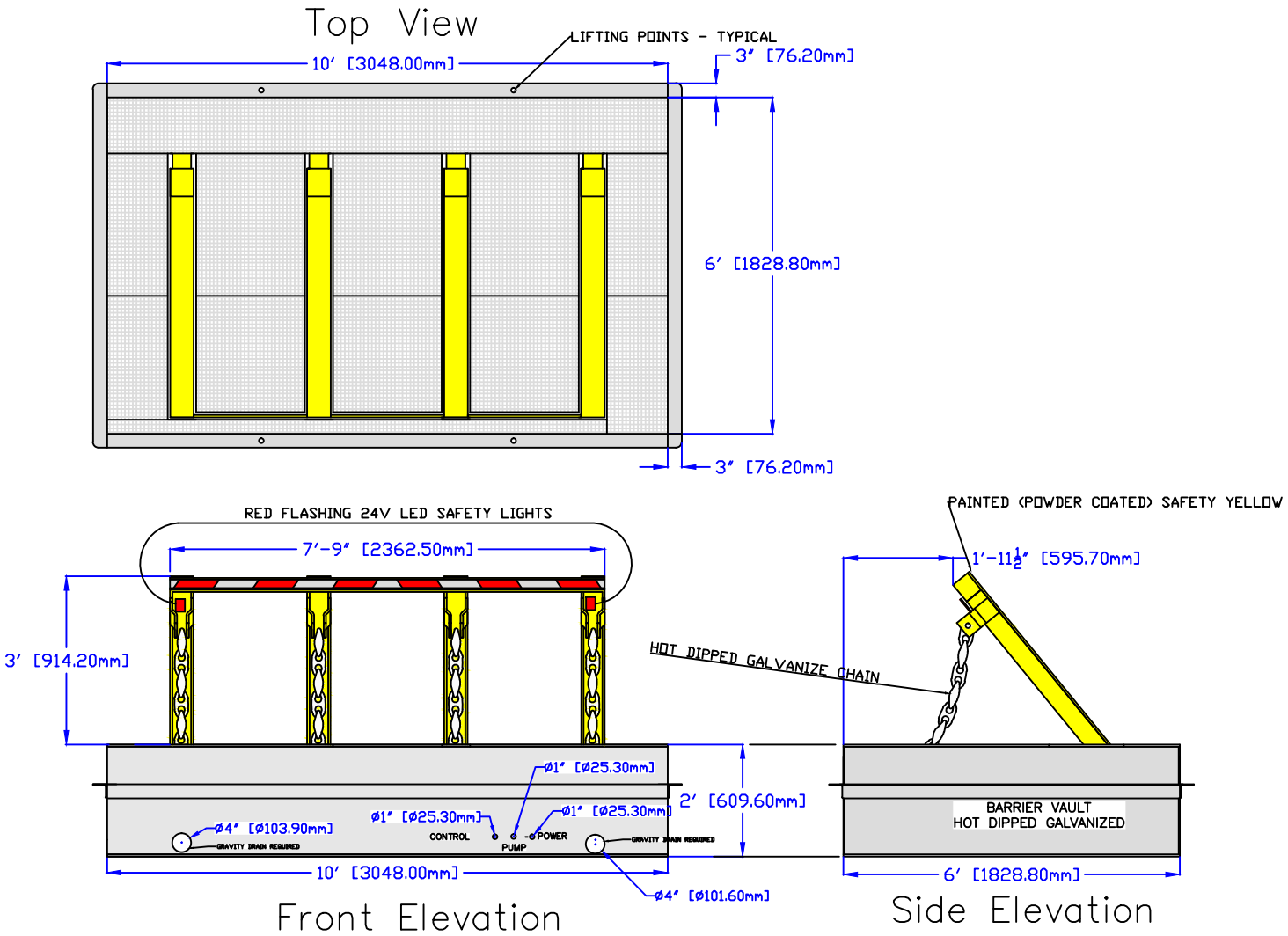

DWN BY: JB
DATE: 2-8-16
PROJECT NO.
SHEET NO. 2

PROJECT NAME: OEM Typical Drawings
SHEET TITLE: ELEVATION RSS2000
SAMPLE DRAWINGS

RSSI BARRIERS, LLC
6530 HWY. 22
PANAMA CITY, FL. 32404
(850)871-9300
RSSI BARRIERS, LLC
866.249.1029
www.rssi.com

REV:	DESCRIPTION:	BY:	DATE:

RSSI BARRIERS, LLC. ALL RIGHTS RESERVED. NO PART OF THIS DOCUMENT MAY BE REPRODUCED OR UTILIZED IN ANY FORM WITHOUT PRIOR WRITTEN AUTHORIZATION OF RSSI BARRIERS, LLC. ©

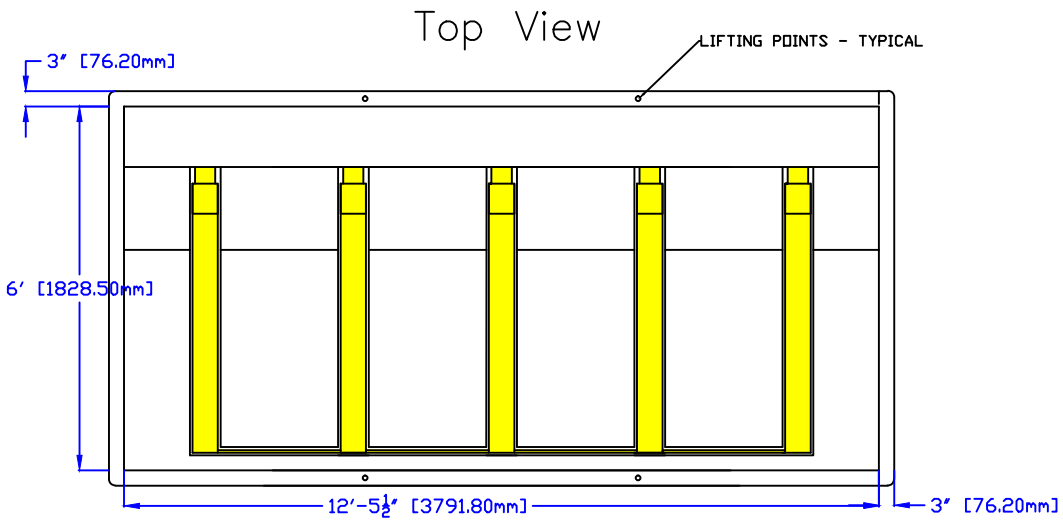

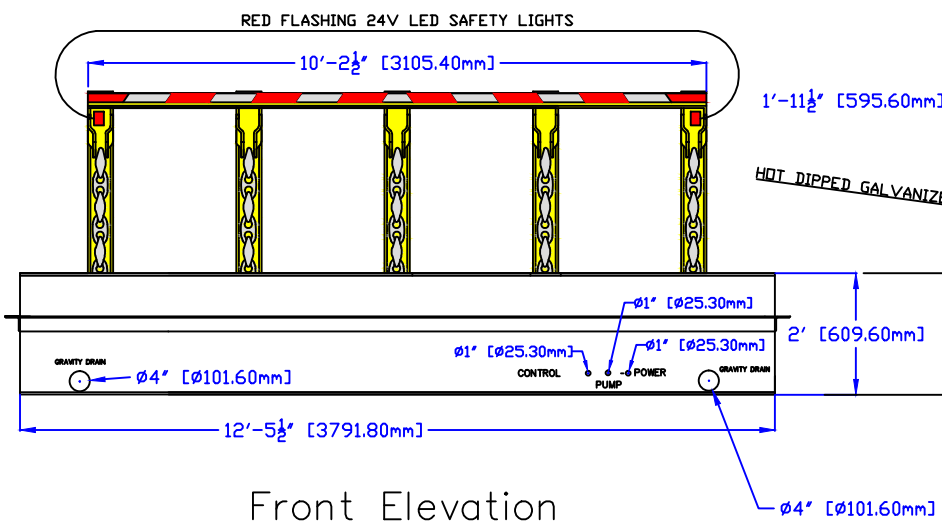

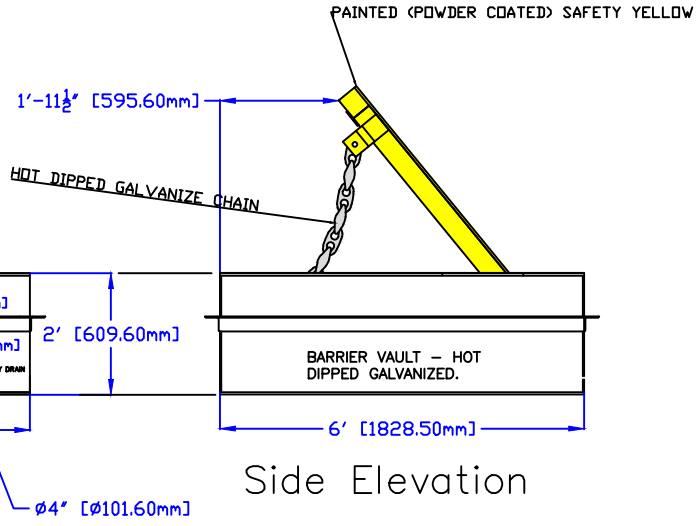

REV:	DESCRIPTION:	BY:	DATE:

RSSI BARRIERS, LLC
6530 HWY. 22
PANAMA CITY, FL. 32404
(850)871-9300
RSSI BARRIERS, LLC
866.249.1029
www.rssi.com

PROJECT NAME: OEM Typical Drawings

SHEET TITLE: ELEVATION RS2000V SAMPLE DRAWINGS

DWN BY: JB
DATE: 2-8-16
PROJECT NO.
SHEET NO. 3

RSSI BARRIERS, LLC. ALL RIGHTS RESERVED. NO PART OF THIS DOCUMENT MAY BE REPRODUCED OR UTILIZED IN ANY FORM WITHOUT PRIOR WRITTEN AUTHORIZATION OF RSSI BARRIERS, LLC.©

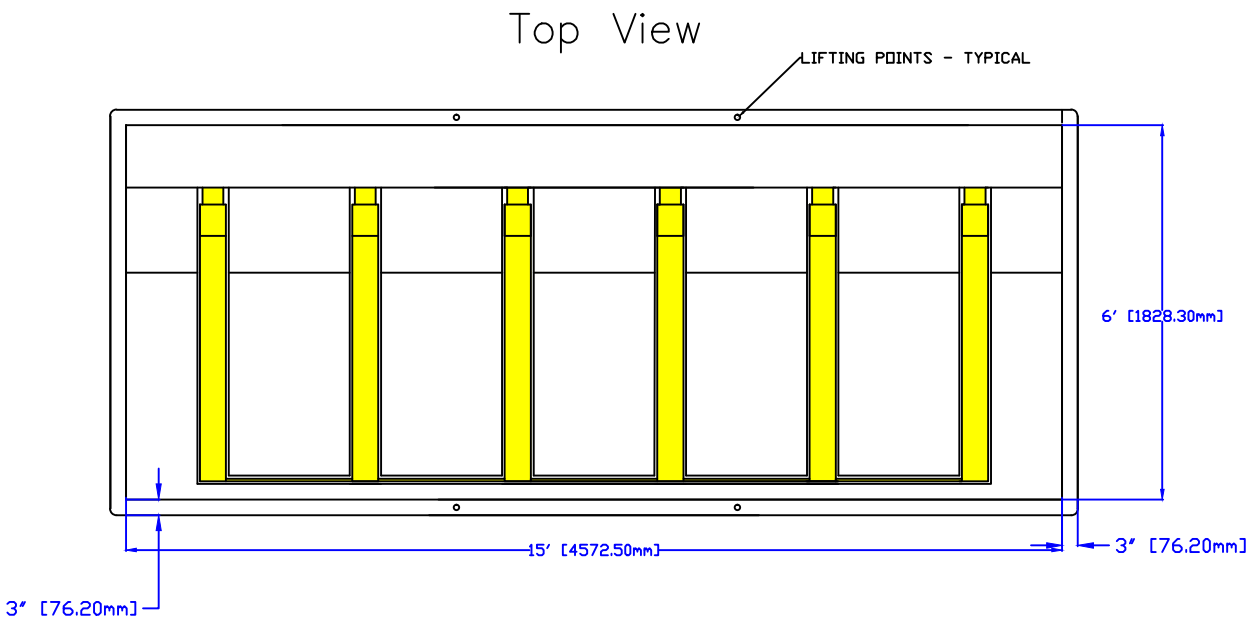

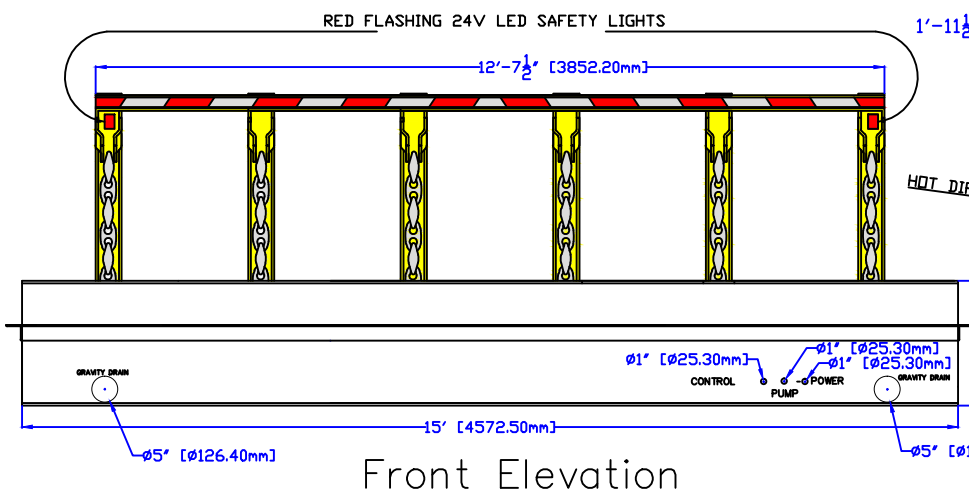

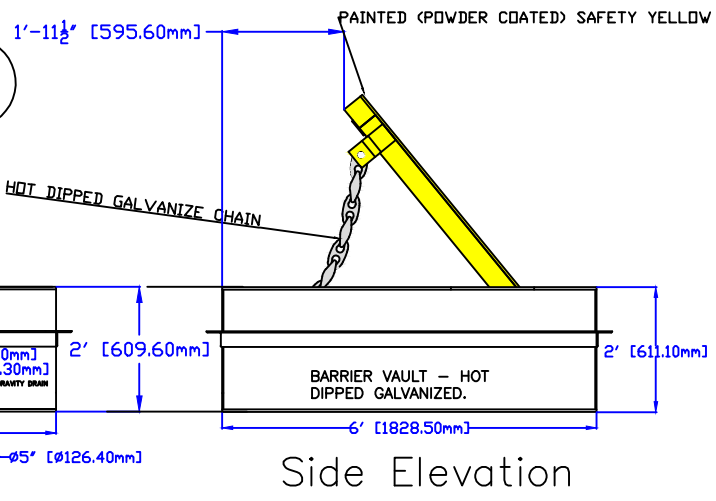

DWN BY: JB
DATE: 2-8-16
PROJECT NO.
SHEET NO. 4

PROJECT NAME: OEM Typical Drawings
SHEET TITLE: ELEVATION RSS2000VI
SAMPLE DRAWINGS

RSSI BARRIERS, LLC
6530 HWY. 22
PANAMA CITY, FL. 32404
(850)871-9300
RSSI BARRIERS, LLC
866.249.1029
www.rssi.com

REV:	DESCRIPTION:	BY:	DATE:

RSSI BARRIERS, LLC. ALL RIGHTS RESERVED. NO PART OF THIS DOCUMENT MAY BE REPRODUCED OR UTILIZED IN ANY FORM WITHOUT PRIOR WRITTEN AUTHORIZATION OF RSSI BARRIERS, LLC.©

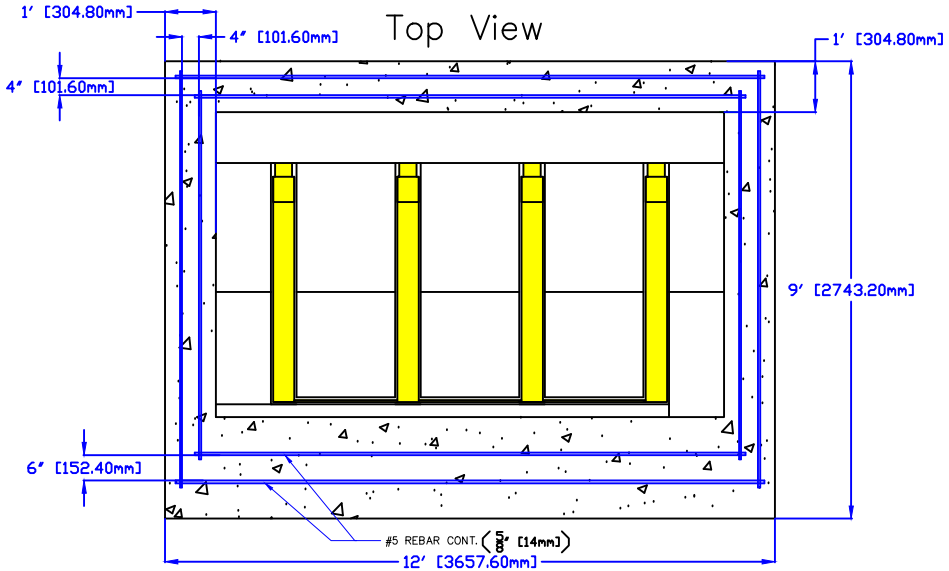

RSS–2000 Vehicle Barrier Installation Notes:

- Excavate 9'(2,743.2–mm) X 12'(3,657.6–mm) X 2' (609.6–mm) pit
- Compact Soil to 95% or per local requirements
- Position barrier in excavated area
- Connect Natural Drains (REQUIRED)
- Connect Conduit Connections (Power, Controls and Sump pump)
- Position #5 (14–mm) rebar (approx. 100 feet(33.48–m))
- Pour approx. 4 yards concrete (3,000 PSI minimum)
- Set vehicle barrier (recommended) 1/2" or 22–mm above existing roadway then taper concrete for a smooth transition.
- Barrier Weight 6,720 pounds (3,048.14–kg) , with heat 7,620 pounds (3,456.37–kg)

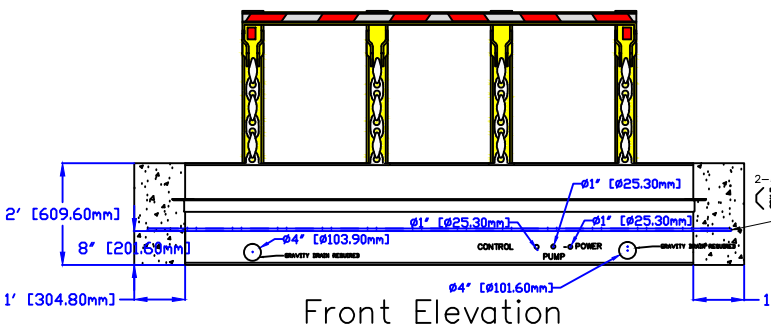

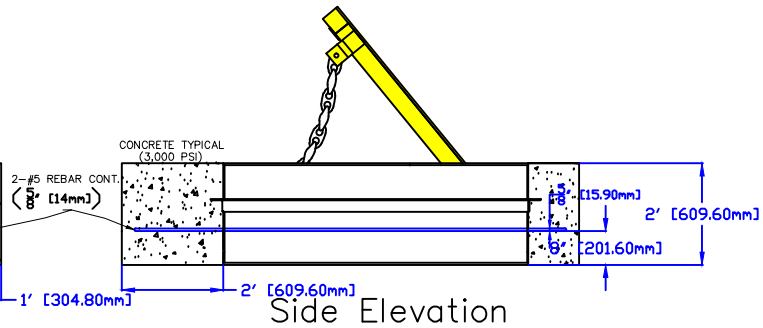

RSSI BARRIERS, LLC. ALL RIGHTS RESERVED. NO PART OF THIS DOCUMENT MAY BE REPRODUCED OR UTILIZED IN ANY FORM WITHOUT PRIOR WRITTEN AUTHORIZATION OF RSSI BARRIERS, LLC. ©

DWN BY: JB
DATE: 2-8-16
PROJECT NO.
SHEET NO. 5

PROJECT NAME: OEM Typical Drawings
SHEET TITLE: FOUNDATION RSS2000 SAMPLE DRAWINGS

RSSI BARRIERS, LLC
6530 HWY. 22
PANAMA CITY, FL. 32404
(850)871-9300
RSSI BARRIERS, LLC
866.249.1029
www.rssi.com

REV:	DESCRIPTION:	BY:	DATE:

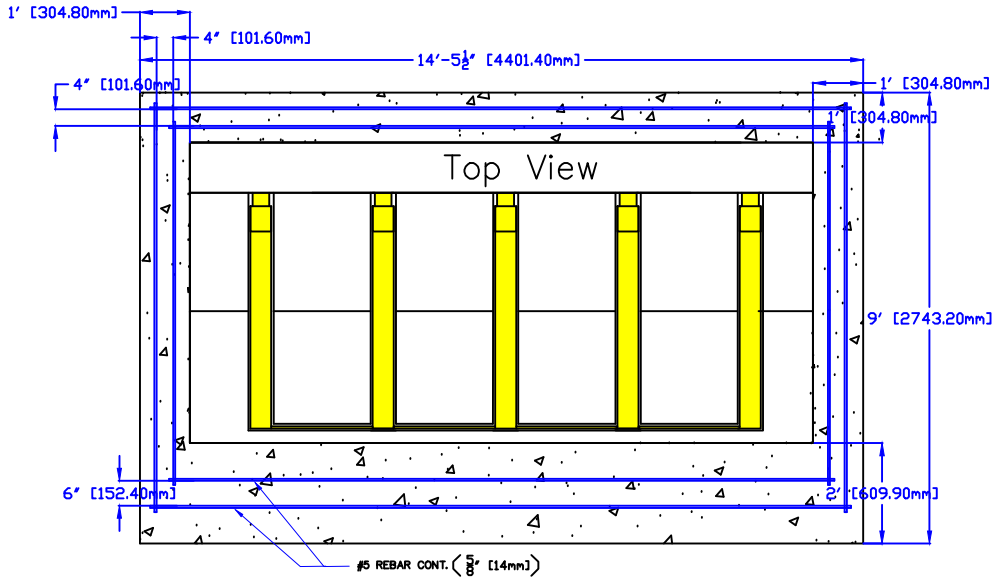

RSS-2000V Vehicle Barrier Installation Notes:

- Excavate 9'(2,743.2-mm) X 14.5'(4,419.6-mm) X 2' (609.6-mm) pit
- Compact Soil to 95% or per local requirements
- Position barrier in excavated area
- Connect Natural Drains (REQUIRED)
- Connect Conduit Connections (Power, Controls and Sump pump)
- Position #5 (14-mm) rebar (approx. 110 feet(33.53-m))
- Pour approx. 5 yards concrete (3,000 PSI minimum)
- Set vehicle barrier (recommended) 1/2" or 22-mm above existing roadway then taper concrete for a smooth transition.
- Barrier Weight 8,260 pounds (3,746.65-kg) , with heat 9,385 pounds (4,256.96-kg)

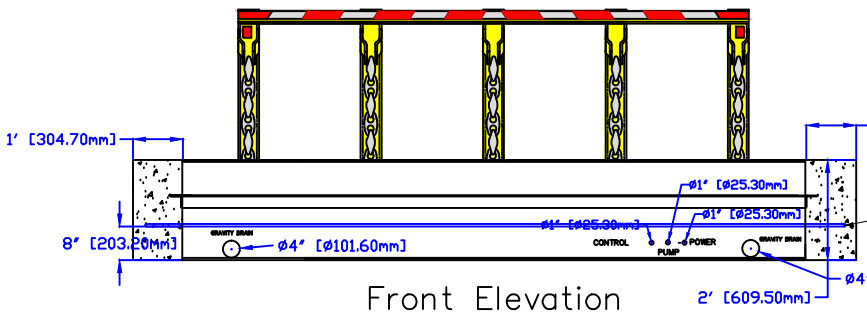

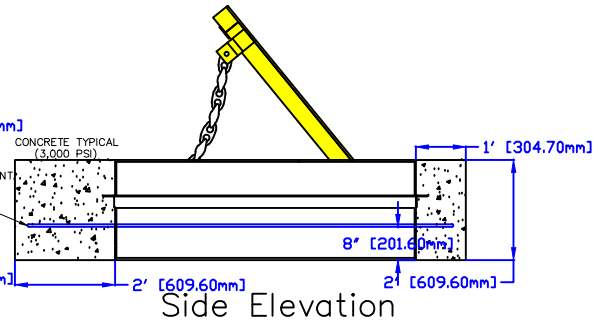

DWN BY: JB	
DATE: 2-8-16	
PROJECT NO.	
SHEET NO.	6

PROJECT NAME: OEM Typical Drawings

SHEET TITLE: FOUNDATION RSS2000V SAMPLE DRAWINGS

RSSI BARRIERS, LLC
6530 HWY. 22
PANAMA CITY, FL. 32404
(850)871-9300

RSSI BARRIERS, LLC
866.249.1029
www.rssi.com

REV:	DESCRIPTION:	BY:	DATE:

RSSI BARRIERS, LLC. ALL RIGHTS RESERVED. NO PART OF THIS DOCUMENT MAY BE REPRODUCED OR UTILIZED IN ANY FORM WITHOUT PRIOR WRITTEN AUTHORIZATION OF RSSI BARRIERS, LLC.©

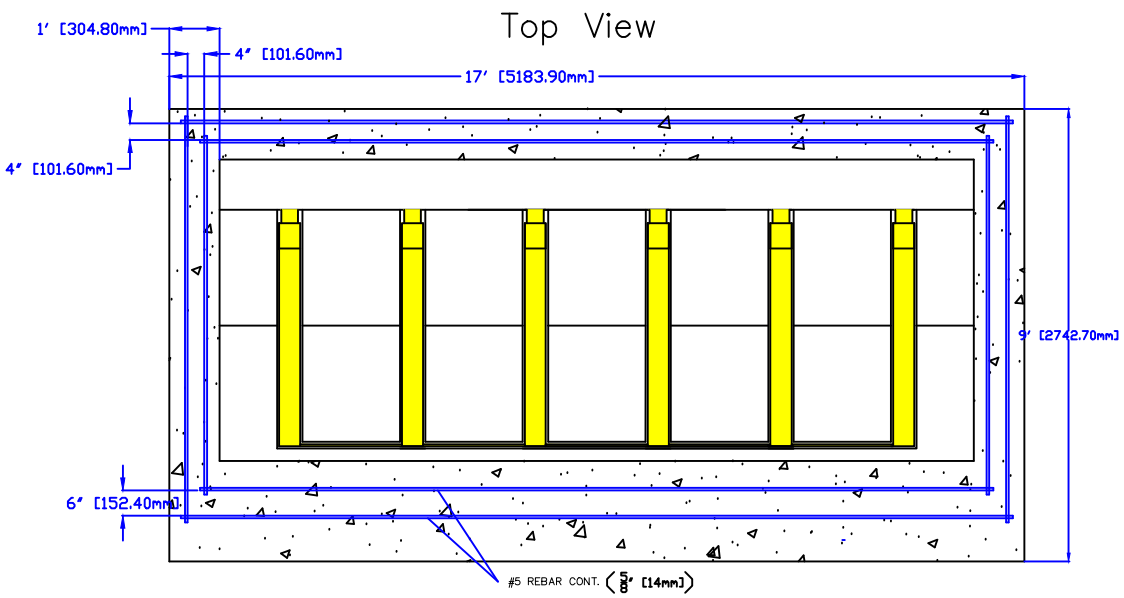

RSS–2000VI Vehicle Barrier Installation Notes:

- Excavate 9'(2,743.2–mm) X 17'(5,181.6–mm) X 2' (609.6–mm) pit
- Compact Soil to 95% or per local requirements
- Position barrier in excavated area
- Connect Natural Drains (REQUIRED)
- Connect Conduit Connections (Power, Controls and Sump pump)
- Position #5 (14–mm) rebar (approx. 120 feet(33.58–m))
- Pour approx. 5.5 cu. yards concrete (3,000 PSI minimum)
- Set vehicle barrier (recommended) 1/2" or 22–mm above existing roadway then taper concrete for a smooth transition.
- Barrier Weight 9,800 pounds (4,445.21–kg), with heat 11,150 pounds (5,057.55–kg)

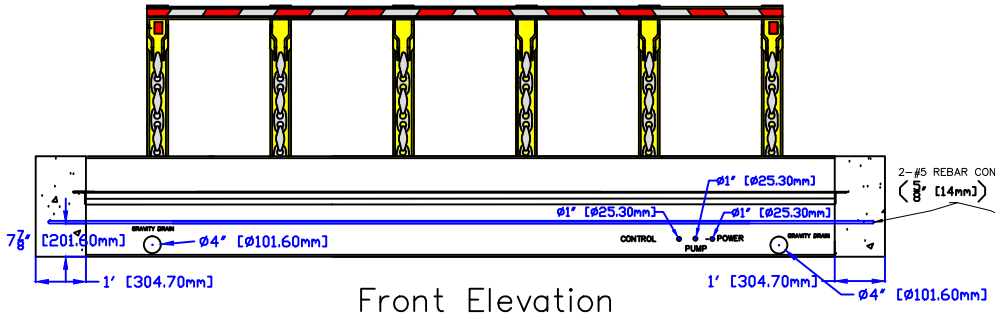

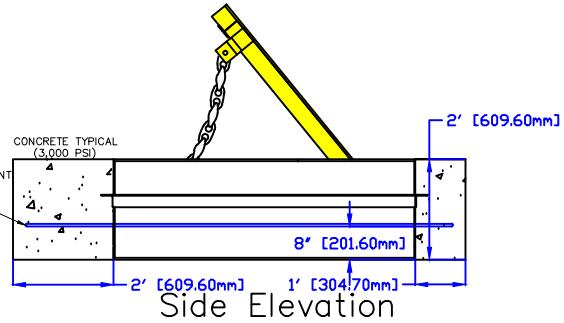

DWN BY: JB
DATE: 2-8-16
PROJECT NO.
SHEET NO. 7

PROJECT NAME: OEM Typical Drawings
SHEET TITLE: FOUNDATION RSS2000VI SAMPLE DRAWINGS

RSSI BARRIERS, LLC
6530 HWY. 22
PANAMA CITY, FL. 32404
(850)871-9300
RSSI BARRIERS, LLC
866.249.1029
www.rssi.com

REV:	DESCRIPTION:	BY:	DATE:

RSSI BARRIERS, LLC. ALL RIGHTS RESERVED. NO PART OF THIS DOCUMENT MAY BE REPRODUCED OR UTILIZED IN ANY FORM WITHOUT PRIOR WRITTEN AUTHORIZATION OF RSSI BARRIERS, LLC. ©

THIS DRAWING IS CONCEPTUAL. SEE SITE DRAWINGS FOR EXACT PLACEMENT OF THE VEHICLE BARRIERS, LOOPS, SAFETY SENSOR AND LIGHTS

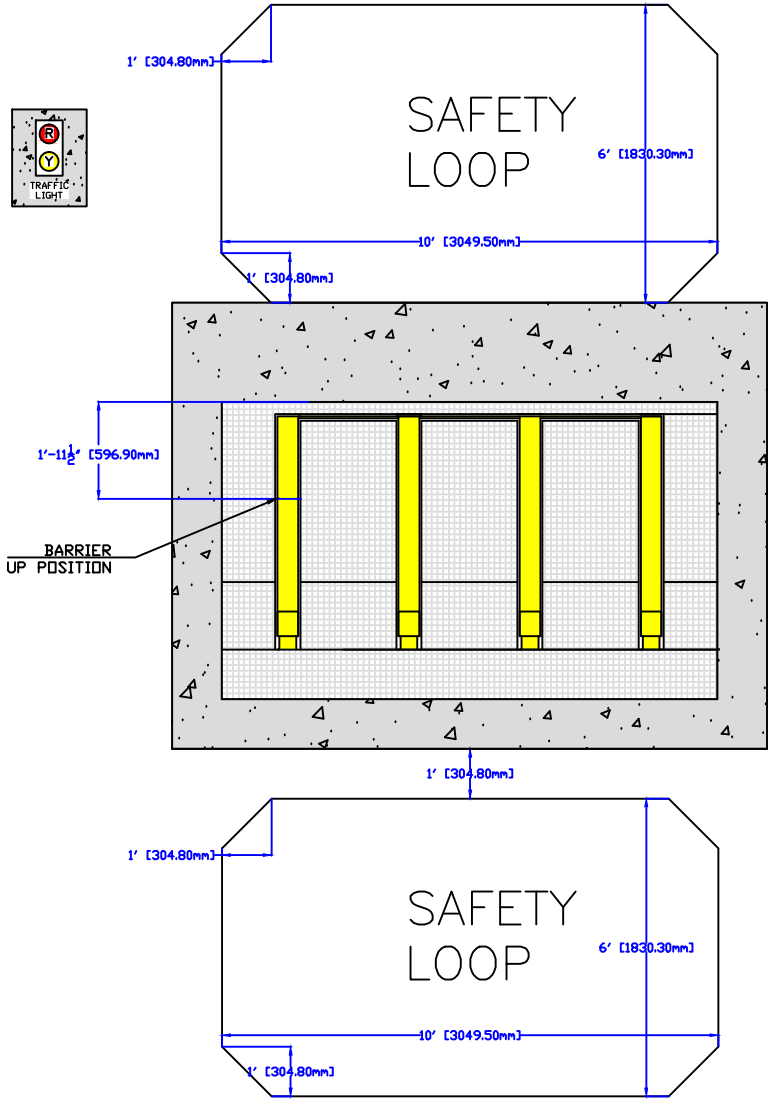

REV:	DESCRIPTION:	BY:	DATE:

RSSI BARRIERS, LLC
866.249.1029
www.rssi.com

RSSI BARRIERS, LLC
6530 HWY. 22
PANAMA CITY, FL. 32404
(850)871-9300

PROJECT NAME: OEM Typical Drawings

SHEET TITLE: SINGLE UNIT SAMPLE DRAWINGS

DWN BY: JB
DATE: 2-8-16
PROJECT NO.
SHEET NO. 8

RSSI BARRIERS, LLC. ALL RIGHTS RESERVED. NO PART OF THIS DOCUMENT MAY BE REPRODUCED OR UTILIZED IN ANY FORM WITHOUT PRIOR WRITTEN AUTHORIZATION OF RSSI BARRIERS, LLC. ©

THIS DRAWING IS CONCEPTUAL. SEE SITE DRAWINGS FOR EXACT PLACEMENT OF THE VEHICLE BARRIERS, LOOPS, SAFETY SENSOR AND LIGHTS

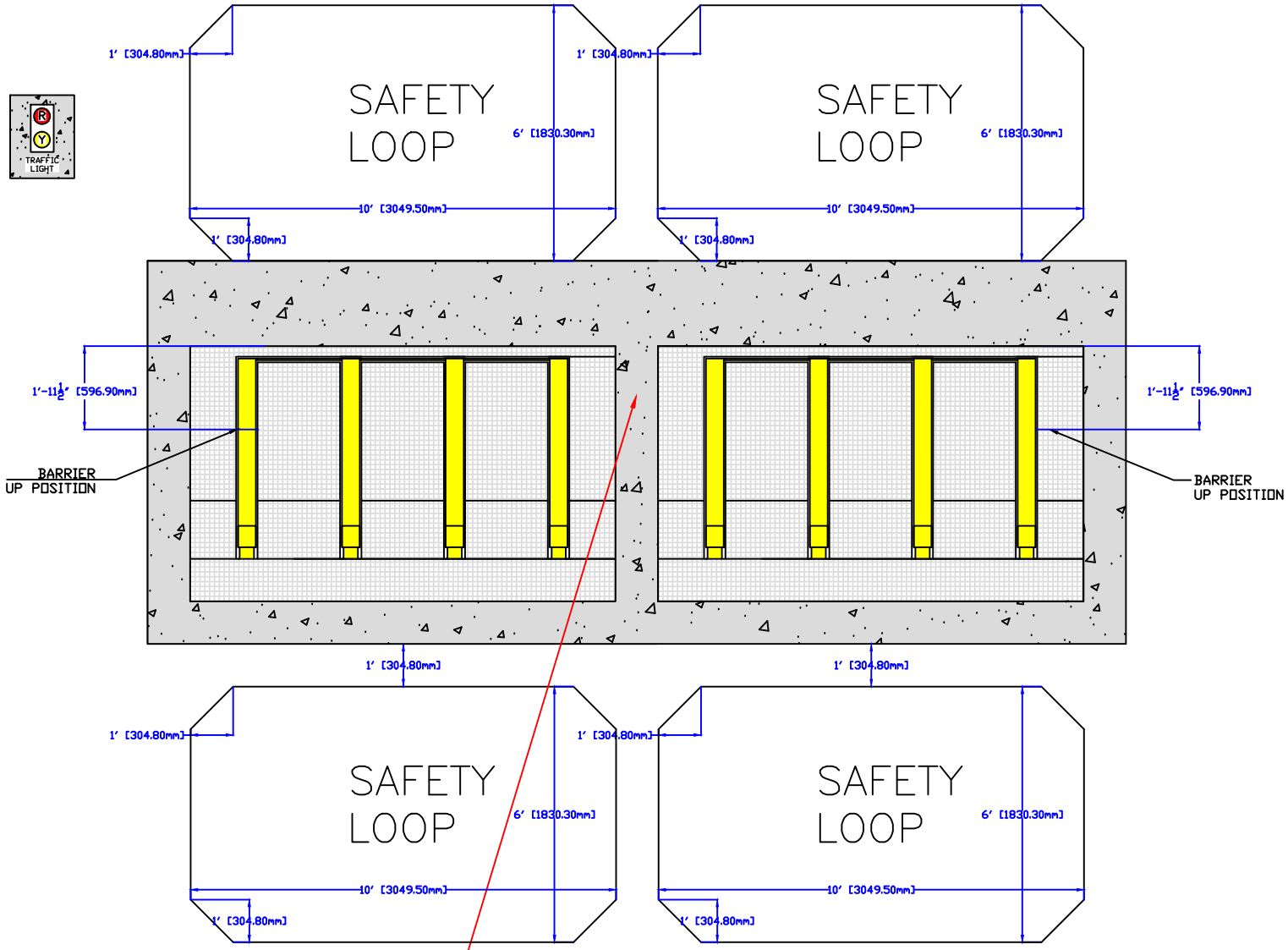

ADJUST THE DISTANCE BETWEEN THE BARRIERS TO ADHERE TO SPECIFICATIONS FOR CLEARANCE DISTANCE BETWEEN ACTIVE AND PASSIVE BARRIER.

DWN BY: JB	
DATE: 2-8-16	
PROJECT NO.	
SHEET NO.	9

PROJECT NAME: OEM Typical Drawings

SHEET TITLE: 2 UNITS SAMPLE DRAWINGS

RSSI BARRIERS, LLC
6530 HWY. 22
PANAMA CITY, FL. 32404
(850)871-9300

RSSI BARRIERS, LLC
866.249.1029
www.rssi.com

REV:	DESCRIPTION:	BY:	DATE:

RSSI BARRIERS, LLC. ALL RIGHTS RESERVED. NO PART OF THIS DOCUMENT MAY BE REPRODUCED OR UTILIZED IN ANY FORM WITHOUT PRIOR WRITTEN AUTHORIZATION OF RSSI BARRIERS, LLC. ©

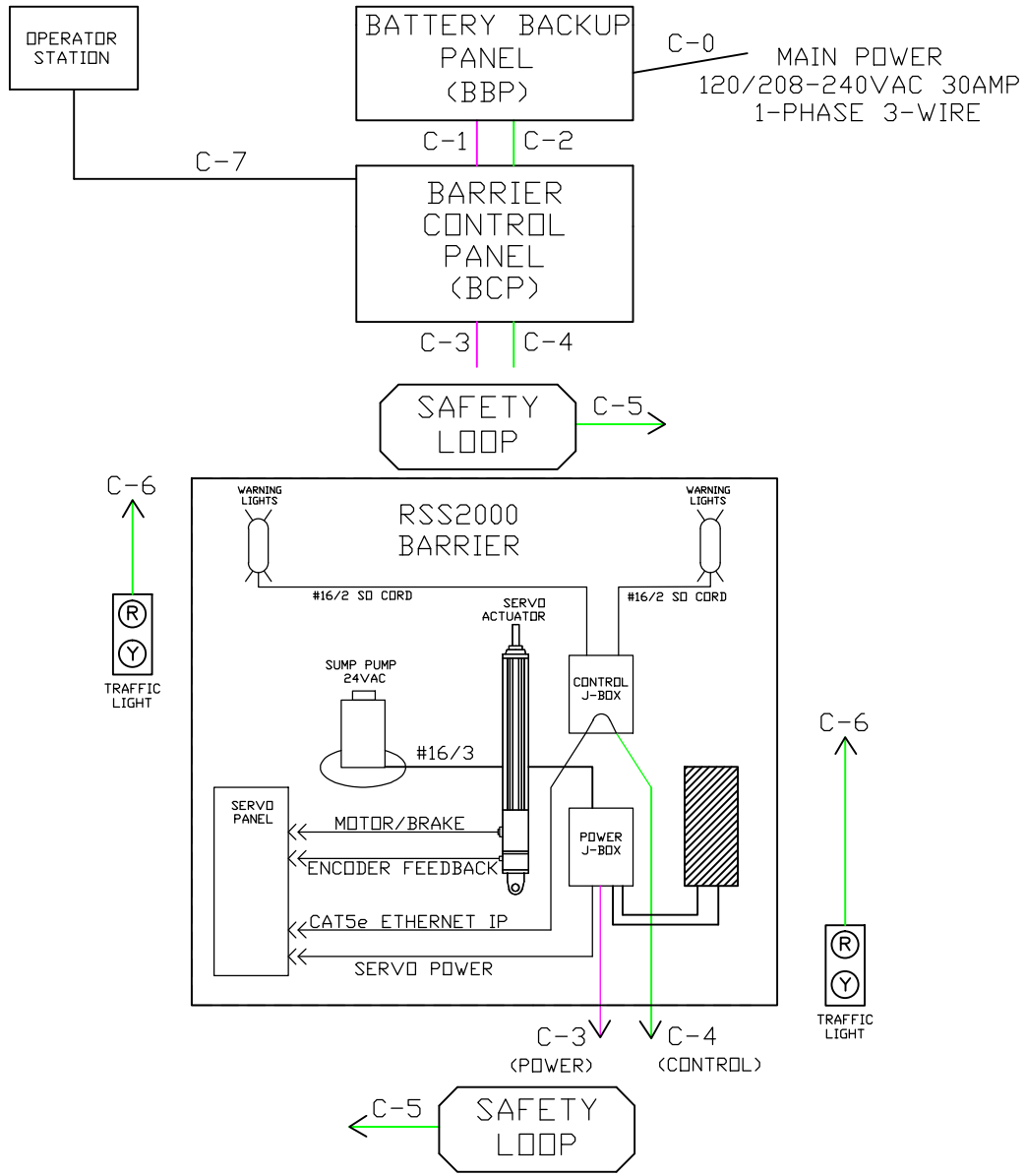

DWN BY: MHS
DATE: 2-8-16
PROJECT NO.
SHEET NO. 10

PROJECT NAME: OEM Typical Drawings
SHEET TITLE: CONDUIT LAYOUT 1-UNIT SAMPLE DRAWINGS

RSSI BARRIERS, LLC
6530 HWY. 22
PANAMA CITY, FL. 32404
(850)871-9300
RSSI BARRIERS, LLC
866.249.1029
www.rssi.com

REV:	DESCRIPTION:	BY:	DATE:

RSSI BARRIERS, LLC. ALL RIGHTS RESERVED. NO PART OF THIS DOCUMENT MAY BE REPRODUCED OR UTILIZED IN ANY FORM WITHOUT PRIOR WRITTEN AUTHORIZATION OF RSSI BARRIERS, LLC. ©

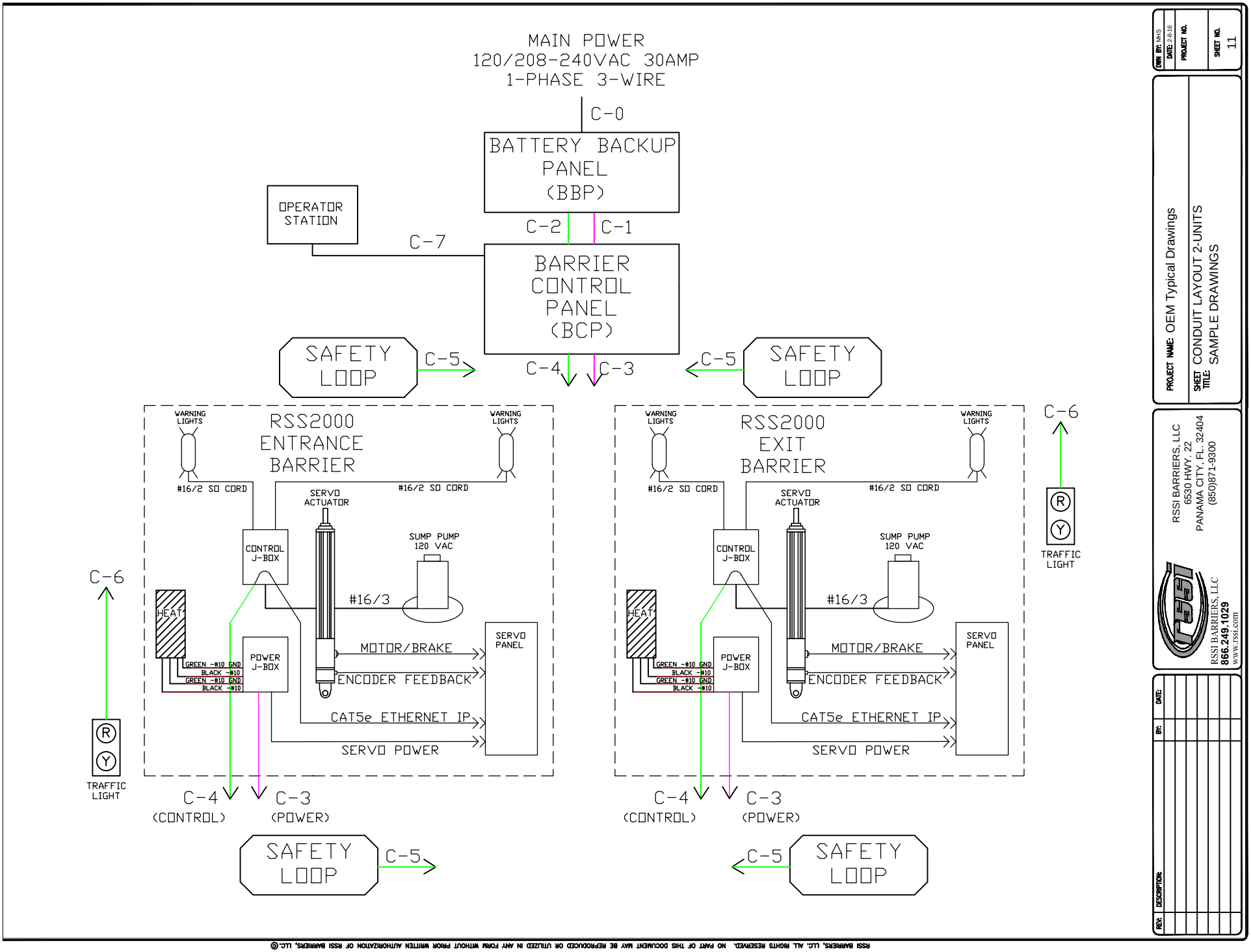

DWN BY: MHS
DATE: 2-8-16
PROJECT NO.
SHEET NO. 11

PROJECT NAME: OEM Typical Drawings
SHEET TITLE: CONDUIT LAYOUT 2-UNITS
SAMPLE DRAWINGS

RSSI BARRIERS, LLC
6530 HWY. 22
PANAMA CITY, FL. 32404
(850)871-9300
RSSI BARRIERS, LLC
866.249.1029
www.rssi.com

REV:	DESCRIPTION:	BY:	DATE:

RSSI BARRIERS, LLC. ALL RIGHTS RESERVED. NO PART OF THIS DOCUMENT MAY BE REPRODUCED OR UTILIZED IN ANY FORM WITHOUT PRIOR WRITTEN AUTHORIZATION OF RSSI BARRIERS, LLC. ©

WIRE & CONDUIT LEGEND

CONDUIT SCHEDULE					
CONDUIT ID	FROM	TO	CONDUIT SIZE	WIRE SPECS	PURPOSE
C-0	MAIN POWER SOURCE	BATTERY BACKUP PANEL	BY INSTALLER	BY INSTALLER L1, L2, N, GND	MAIN POWER
C-1	BATTERY BACKUP PANEL	BARRIER CONTROL PANEL	1″	4-#10 THHN 1-#10 GND	SYSTEM POWER
C-2	BATTERY BACKUP PANEL	BARRIER CONTROL PANEL	1″	2-#16 THHN	BATTERY BACKUP STATUS
C-3	BARRIER CONTROL PANEL	BARRIER POWER J-BOX	1″	4-#10 THHN 2-#10 GND 2-#14 THHN 1-#14 GND	SERVO DRIVE BARRIER HEAT SUMP PUMP
C-4	BARRIER CONTROL PANEL	BARRIER CONTROL J-BOX	1″	1-CAT5e CABLE 2-#14THHN	COMMUNICATIONS WARNING LED'S
C-5	BARRIER CONTROL PANEL	SAFETY LOOPS	1″	TYPE XPLE LOOP WIRE	SAFETY LOOPS
C-6	BARRIER CONTROL PANEL	TRAFFIC LIGHTS (24VDC)	1″	3-#14 THHN	TRAFFIC LIGHTS
C-7	BARRIER CONTROL PANEL	OPERATOR STATION	1″	TBD	OPERATOR CONTROLS

ALL FIELD WIRING TO BE THHN STRANDED CONDUCTORS.
ALL CAT5E CABLE IN CONDUIT TO BE TYPE CMXF.

NOTE: IT IS THE RESPONSIBILITY OF THE INSTALLING CONTRACTOR TO ENGINEER ALL WIRING TO MEET THE GOVERNING WIRE SIZE, POWER REQUIREMENTS AND LOCAL ELECTRICAL CODES.. THIS WIRE SIZE CHART IS BASED ON A MAXIMUM DISTANCE OF 100' FROM THE BCP TO THE BARRIER.

DWN BY: MHS
DATE: 2-8-16
PROJECT NO.
SHEET NO. 12

PROJECT NAME: OEM Typical Drawings
SHEET TITLE: WIRE AND CONDUIT LEGEND
SAMPLE DRAWINGS

RSSI BARRIERS, LLC
6530 HWY. 22
PANAMA CITY, FL. 32404
(850)871-9300
RSSI BARRIERS, LLC
866.249.1029
www.rssi.com

REV:	DESCRIPTION:	BY:	DATE:

RSSI BARRIERS, LLC. ALL RIGHTS RESERVED. NO PART OF THIS DOCUMENT MAY BE REPRODUCED OR UTILIZED IN ANY FORM WITHOUT PRIOR WRITTEN AUTHORIZATION OF RSSI BARRIERS, LLC. ©

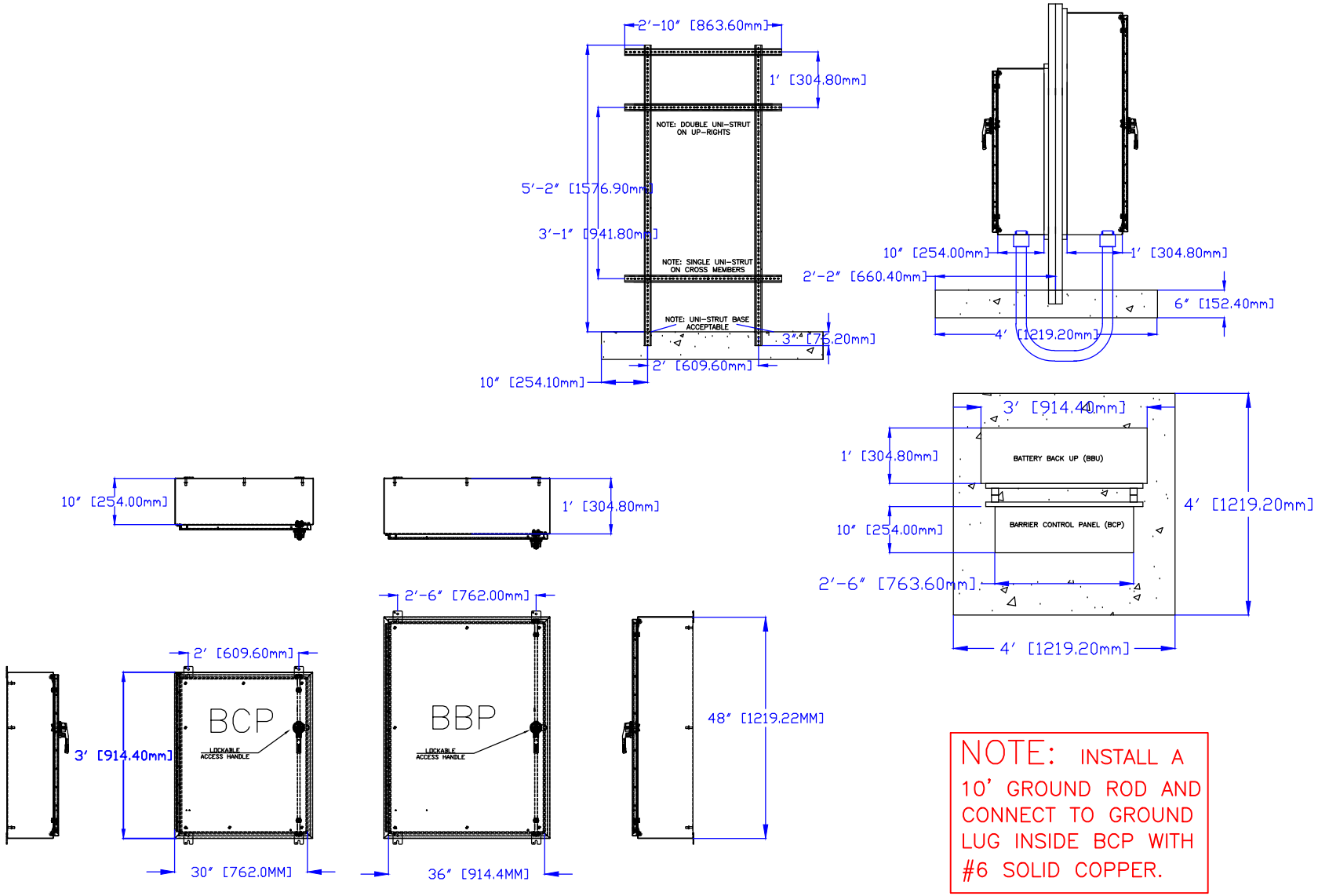

NOTE: INSTALL A 10' GROUND ROD AND CONNECT TO GROUND LUG INSIDE BCP WITH #6 SOLID COPPER.

DWN BY: JB
DATE: 2-8-16
PROJECT NO.
SHEET NO. 13

PROJECT NAME: OEM Typical Drawings
SHEET TITLE: CONTROL PANEL FOUNDATION SAMPLE DRAWINGS

RSSI BARRIERS, LLC
6530 HWY. 22
PANAMA CITY, FL. 32404
(850)871-9300
RSSI BARRIERS, LLC
866.249.1029
www.rssi.com

REV:	DESCRIPTION:	BY:	DATE:

RSSI BARRIERS, LLC. ALL RIGHTS RESERVED. NO PART OF THIS DOCUMENT MAY BE REPRODUCED OR UTILIZED IN ANY FORM WITHOUT PRIOR WRITTEN AUTHORIZATION OF RSSI BARRIERS, LLC.©